HORSEPOWER
Gross: 671 kW **899 HP** @ 2000 rpm
Net: 664 kW **890 HP** @ 2000 rpm

OPERATING WEIGHT
113200 kg **249,560 lb**

KOMATSU®

D475A-5 SUPER DOZER

With Tier 2 Engine

D 475A

CRAWLER DOZER

Photos may include optional equipment.

WALK-AROUND

Komatsu-integrated design for the best value, reliability, and versatility. Hydraulics, power train, frame, and all other major components are engineered by Komatsu. You get a machine whose components are designed to work together for higher production, greater reliability, and more versatility.

Unique and Unrivaled Noise-Suppression

- Operator noise: 70dB(A)
  (Engine at high idle, cooling fan at 70%, and air conditioner OFF.)
- Dynamic noise (outside): 110dB(A)
  As per ISO 6395

The Super Dozer

The D475A-5 Super Dozer greatly contributes to reducing operating costs ($/tons) by high dozing productivity.

- Large capacity Super Dozer blade with low dozing resistance

A 664 kW ***890 HP*** turbocharged, after-cooled engine provides plenty of power for excellent productivity and is Tier 2 EPA, EU and Japan emissions certified.

Hydraulic Driven Engine Cooling Fan controlled automatically, reduces fuel consumption and operating noise levels.

Extra-low Machine Profile provides excellent machine balance and low center of gravity.

The standard ***Dual Tilt Dozer*** increases productivity while reducing operator effort.

Large blade capacity:
45 m^3 **58.9 yd^3** (Super Dozer).

Automatic lockup ***torque converter*** saves fuel, increases speed and power transmission efficiency on long pushes.

Track Link With Wedge Ring

reduces maintenance cost by making turning pins easier, with improved pin reuse.

D475A-5SD

NET HORSEPOWER
664 kW **890 HP** @ 2000 rpm

OPERATING WEIGHT
113200 kg **249,560 lb**

BLADE CAPACITY
45.0 m^3 **58.9 yd^3**

Ergomomic Hexagonal Designed Cab Includes:

- Spacious interior
- Comfortable ride with viscous cab damper mounting
- Excellent visibility
- High capacity air conditioning system
- Palm Command Control System (PCCS) lever controls
- Pressurized cab
- Multi-position adjustable armrest
- Travel control console integrated with operator seat

Vehicle Health Monitoring System (VHMS) with ORBCOMM provides efficient monitoring of machine conditions for maximum productivity.

Photos may include optional equipment.

Rear Attachments (optional)

- Variable giant ripper
- Counterweight

Preventative Maintenance

- Centralized Service Station
- Enclosed Hydraulic Piping
- Modular Power Train Design
- Oil Pressure Checking Ports

Electronic Controlled Modulation Valve (ECMV) Controlled Steering Clutch/Brake System

facilitates smooth and shockless steering operation.

K-Bogie Undercarriage System improves traction, component durability, and operator comfort.

Track shoe slip control system

reduces operator fatigue and improves undercarriage life.

Low-drive, long-track, eight roller undercarriage

ensures outstanding dozing ability and stability.

PALM COMMAND CONTROL SYSTEM (PCCS)

Komatsu's new ergonomically designed control system "PCCS" creates an operating environment with *"complete operator control."*

Human-Machine Interface

Palm Command Electronic Controlled Travel Control Joystick

Ergonomically designed palm command travel joystick provides the operator with a relaxed posture and superb fine control without operator fatigue. Transmission gear shifting is simply carried out with thumb push buttons.

Travel Control Joystick

Blade and Ripper Control Joystick

Fully Adjustable Air Suspension Seat and Travel Control Console

For improved rear visibility during the return cycle, the operator can adjust the seat 15° to the right. The transmission and steering controls move with the seat for best operator comfort. The operator seat is also tiltable for facilitating down hill dozing. The travel control console has adjustments fore and aft, and for height. With an independently adjustable armrest, each D475A Super Dozer operator can adjust control positions to their individual preference, providing optimum operational posture.

Fuel Control Dial

Engine RPM is controlled by electric signals, providing ease of operation and eliminating maintenance of linkage and joints.

Palm Command Proportional Pressure Control (PPC) Controlled Blade Control Joystick

Blade control joystick uses the Proportional Pressure Control (PPC) valve and the same palm command type joystick as travel control joystick. PPC control, combined with the highly reliable Komatsu hydraulic system, enables superb fine control (Dual tilt and pitch operation are enabled by depressing switch with thumb).

Height Adjustable Blade Control Armrest

Blade control armrest is height adjustable, without any tools, in three stages, providing the operator with firm arm support and ideal armrest positioning.

Position Adjustable Ripper Control Lever

Ripper control lever is position adjustable, providing optimum operation posture for all operators during ripping operations facing front or watching ripper point.

Air Suspension Seat

Outline of Electronic Control System

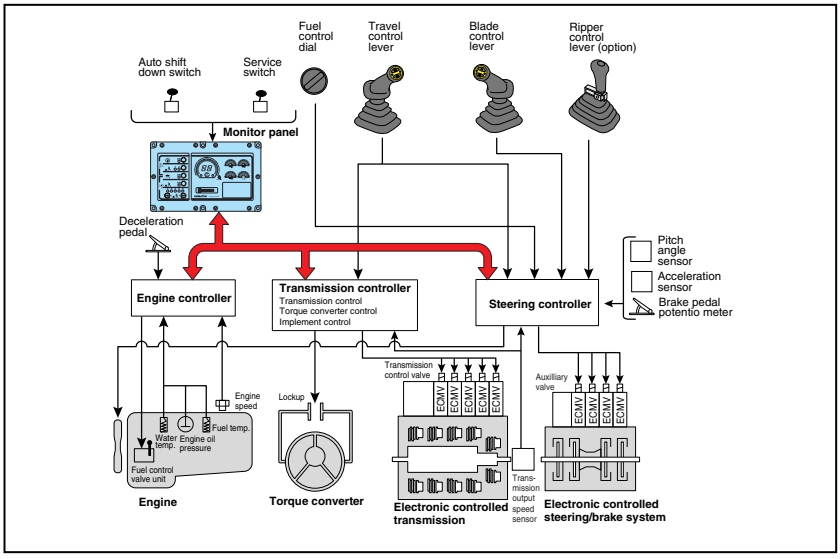

Power Train Electronic Control System

Smooth and Soft Operation

The D475A-5 Super Dozer utilizes a newly designed power train electronic control system. The controller registers the amount of operator control (movements of lever and operation of switches) along with machine condition signals from each sensor to accurately calculate the control of the torque converter, transmission, and steering clutches and brakes for optimized machine operation. The ease of operation and productivity of the new D475A-5 Super Dozer is greatly improved through these new features.

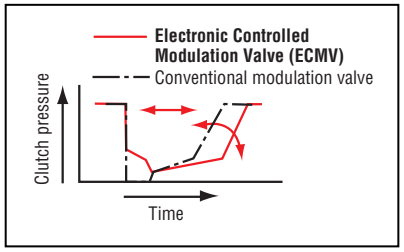

Electronic Controlled Modulation Valve (ECMV) Controlled Transmission

Controller automatically adjusts each clutch engagement depending on travel conditions such as gear speed, RPM, and shifting pattern. This provides shockless, smooth clutch engagement, improved component reliability, improved component life and operator ride comfort.

Electronic Controlled Modulation Valve (ECMV) Controlled Steering Clutches/Brakes

Sensors monitor machine operating conditions and electronically control steering clutches and brakes. Monitioring application parameters such as size of load during dozing, incline angle of slope, and load provides smooth and easy operation by reducing counter-steering on downhill travel, etc.

Effect of Electronic Controlled Modulation Valve (ECMV) Steering Clutches/Brake Control

When dozing and turning, ECMV automatically controls stroke ratio of steering clutches and brakes depending on degree of load, enabling smooth dozing and turning.

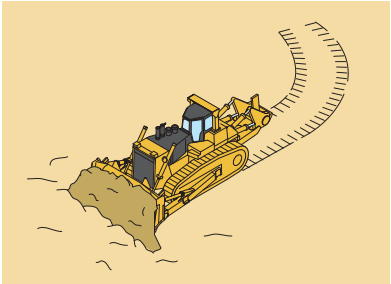

When dozing downhill, ECMV automatically controls steering clutches and brakes depending on incline of machine or degree of load, reducing counter-steering and producing smooth dozing operation.

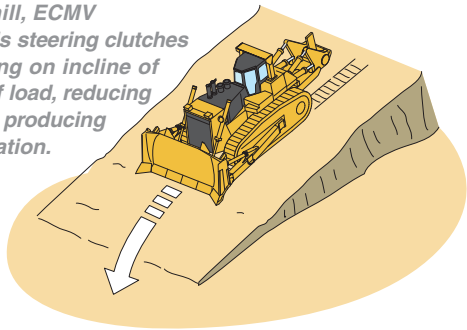

Preset Travel Speed Selection Function

Preset travel speed selection function is standard equipment, enabling the operator to select fore and aft travel speed from three preset patterns; F1-R1, F1-R2, and F2-R2 by using the UP/DOWN switch. When the F1-R2 or F2-R2 preset pattern is selected and the travel control is moved into forward or reverse, the machine travels in the preset gear range automatically. This function reduces manual gear shifting frequency during machine operation, enabling the operator to focus on directional and hydraulic control. Preset travel speed selection is especially helpful when used in combination with the Auto-Downshift Function and reduces cycle times during repeated round trip operations.

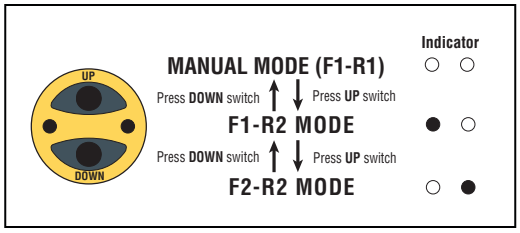

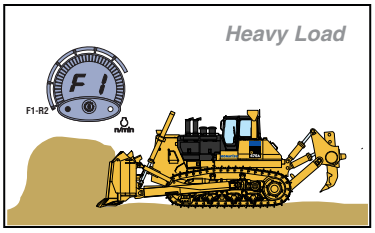

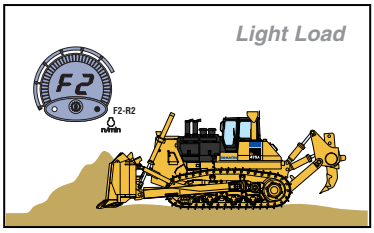

Auto-Downshift Function

The controller monitors engine speed, travel gear, and travel speed. When load is applied and machine travel speed is reduced, the controller automatically downshifts to optimum gear speed to provide high fuel efficiency. This function provides comfortable operation and high productivity without manual downshifting (This function can be cancelled with the cancel switch).

Actuated with Heavy Load on Steep Slope

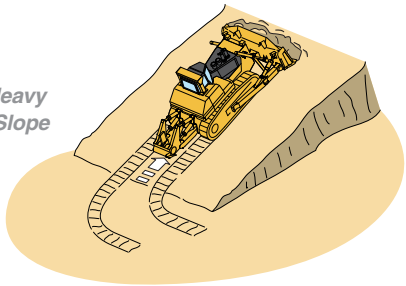

PRODUCTIVITY FEATURES

Engine

The Komatsu SAA12V140E-3 engine delivers 664 kW **890 HP** at 2000 rpm. These features, together with the heavy machine weight, make the D475ASD-5 a superior crawler dozer in both ripping and dozing production. The engine is EPA Tier 2 emission regulation certified, and features direct fuel injection, turbocharger, and air-to-air aftercooler to maximize fuel efficiency. To minimize noise and vibration, the engine is mounted to the main frame with rubber cushions.

Hydraulic Driven Engine Cooling Fan

Fan rotation is automatically controlled depending on coolant and hydraulic oil temperature, saving fuel consumption and providing great productivity with a quiet operating environment.

Automatic Torque Converter Lockup System

For greater efficiency during long pushes, the lockup mode allows the system to automatically engage the torque converter lockup clutch. Locking up the torque converter transmits all the engine power directly to the transmission, increasing ground speed, and thus achieving efficiencies equal to a direct drive. The results of this efficient use of engine power are less fuel consumption, and faster cycle times.

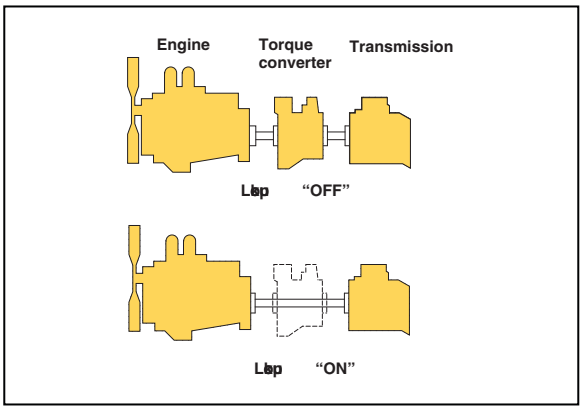

K-Bogie Undercarriage System

New K-Bogie Undercarriage System combines prior advantages with new additional features.

Current features:

- K-Bogies that oscillate with two fulcrums assure large amount of track roller vertical travel. Impact load to undercarriage components is minimized and durability of components is improved since track rollers are always in contact with track link.
- Track rollers follow track link movement to extend the undercarriage life.
- Excellent riding comfort is provided due to less vibration and shock when traveling over rough terrain.

Features on new K-Bogie undercarriage system:

- New K-Bogies with front and rear single bogies are utilized providing increased length of track on ground to improve machine stability.
- The oscillating idler and increased sprocket lead angle improve riding comfort when travelling over rough terrain.

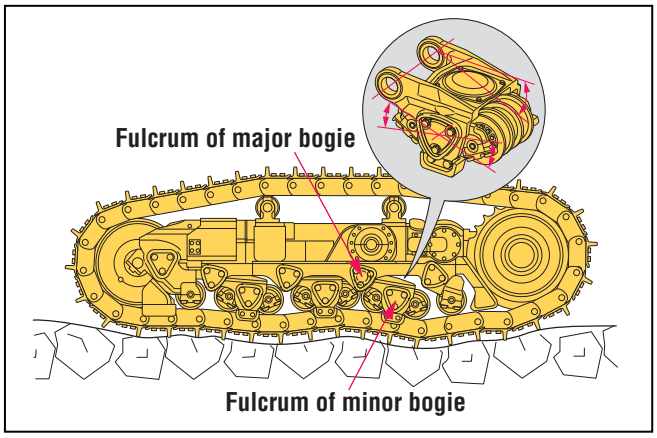

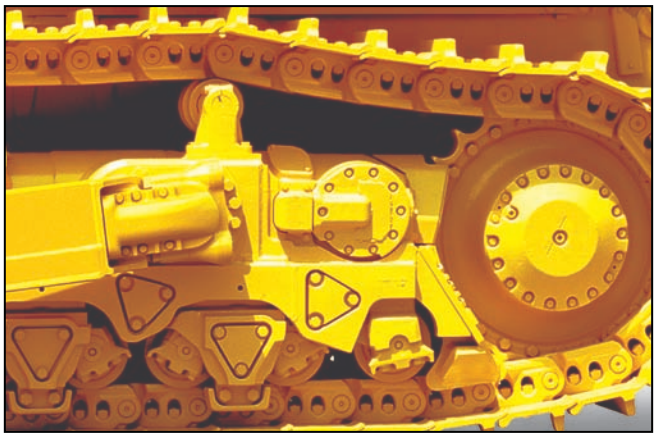

When It Comes To Crawler Dozers, Bigger Really Is Better

Bigger dozers are more efficient—they push more material per miner, per hour, and per shift, for a lower overall cost per yard. Presenting the most efficient of them all—the Komatsu D475A-5 Super Dozer.

Photo may include optional equipment.

Super Dozer Blade

Thanks to an exclusive, proprietary blade design, the Super Dozer answers a fundamental challenge of dozer design—how to push more load without a proportionate increase in operating weight and horsepower. The D475A-5 SD's massive 45.0 m^3 **58.9 yd^3** Super Dozer Blade gives you 15% more production than a conventional U-blade in level dozing.

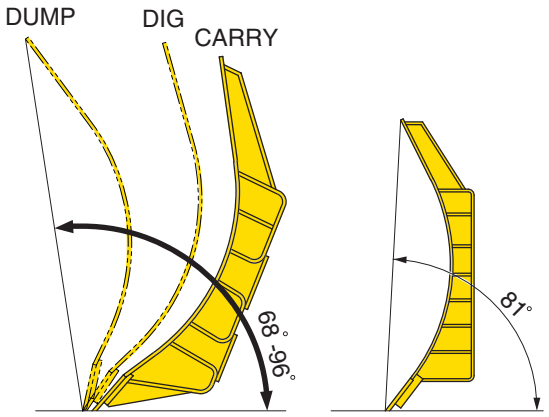

D475ASD-5
Super Dozer Blade

Conventional
34.4m^3 **45.0yd^3**
U-Blade

Unlike ordinary dozer blades, the Super Blade has a full range of movement. Three basic positions—dig, carry and dump—create previously unheard-of levels of efficiency. It also includes auto-dump and auto-reposition features.

WORKING ENVIRONMENT

Operator Comfort

Operator comfort is essential for safe and productive work. The D475A-5 Super Dozer provides a quiet, comfortable environment where the operator can concentrate on the work at hand.

Hexagonal Pressurized Cab

- The cab's new hexagonal design and large tinted glass windows provide excellent front, side, and rear visibility.
- Improved cab sealing, air filters, and increased internal air pressure combine to reduce the amount of dust entering the cab.
- The floor mat and door sill are the same height to facilitate easy cleaning.
- The high quality cab interior is fully lined with sound absorbing material.

Comfortable Ride with New Cab Damper Mounting and K-Bogie Undercarriage

D475A-5 Super Dozer's cab mount uses a newly designed cab damper mounting which further improves the viscous damper and provides excellent shock and vibration absorption capacity with its long stroke. The cab damper mounting, combined with new K-bogie undercarriage, softens shocks and vibrations, while traveling over adverse conditions, that are impossible to absorb with conventional cab mounting methods. The soft spring cab damper isolates the cab from the machine body, suppressing vibrations and providing a quiet, comfortable operating environment.

Cab Damper Mounting

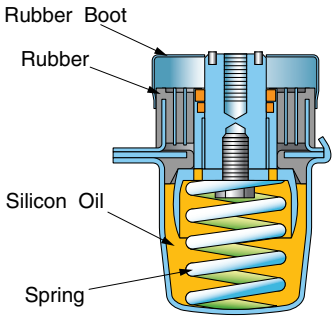

Low Sound Levels

The D475A-5 Super Dozer features a unique and unrivaled low noise design. This is accomplished by improvements not only in the cab but throughout the machine. The cab features an insulated double floor to reduce power train noise, thicker glass in the door, and increased pressurization from improved window seals. Engineered baffles on the machine absorb and reduce the fan noise. Cool air inlet ducts lined with sound absorbing material direct the air to the hydraulic fan, and a double insulated engine hood with additional sound absorbing material further reduces engine noise. These improvements help the D475A-5 Super Dozer achieve remarkably low sound levels.

- Operator noise: 70dB(A) (Engine at high idle, fan speed at 70%, and air conditioner OFF)
- Dynamic noise (outside): 110dB(A) (As per ISO 6395)

Improved Visibility in Rear of Blade

The shape of the blade heel and the position of the operator's seat are changed so that the operator can check the ground in the rear of the blade during dozing. Accordingly, the operator can work more accurately. In addition, the position of the exhaust pipes are changed for better front visibility.

Relocated Air Intake Ports of Air Conditioner

The air conditioner fresh air inlet is located above the fender to reduce dust from the undercarriage from entering the cab. The inside air recirculation inlet is located behind the operator's seat, away from the dirt and dust of the floor mat, to provide an increased cleaning/replacement interval.

EASY MAINTENANCE

Preventative Maintenance

Preventative maintenance is the only way to ensure long service life from your equipment. That's why Komatsu designed the D475A-5 Super Dozer with conveniently located maintenance points to make necessary inspections and maintenance quick and easy.

Centralized Service Station

To ensure convenient maintenance, the transmission and torque converter oil filters are both arranged next to the power train oil level gauge.

Monitor with Self-Diagnostic Function

If the monitor finds abnormalities, the corresponding warning lamp blinks and warning buzzer sounds. When abnormalities occur during operation, user code and service meter are displayed alternately. When a high importance user code is displayed, a caution lamp blinks and warning buzzer sounds to prevent the development of serious problems.

Gull-Wing Engine Side Covers

Dual insulated gull-wing engine side covers facilitate engine maintenance and filter replacement. Side covers are thick one-piece structures with bolt-on latches to improve durability and repairability and facilitate easy opening.

Low Maintenance Costs

Track Link with Wedge Ring

New D475A-5 Super Dozer track links feature reduced press-fit force and a wedge ring. (Conventional track pins are retained only with a large press-fit force.) This means easier service with less pin damage when turning pins and bushings. The result is improved undercarriage life and lower maintenance cost through reduced wear, greater pin reusability, and fewer maintenance man-hours.

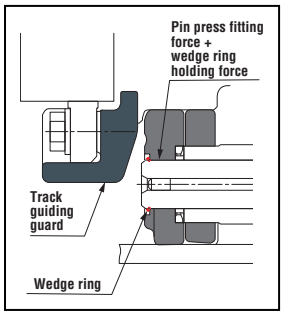

Highly Reliable Electric Circuit

The electrical circuit reliability is increased by utilizing dust, vibration, and corrosion resistant "DT connectors". The reinforced electrical wiring harnesses include a circuit breaker and are covered with a heat-resistant material to increase mechanical strength, provide longer life, and protect the system from damage.

Oil Pressure Checking Ports

Pressure checking ports for power train components are centralized to promote quick and simple diagnosis.

Vehicle Health Monitoring System (VHMS) With ORBCOMM

VHMS controller monitors the health conditions of major components and enables remote analysis of the machine and its operation. This process is supported by the Komatsu distributors, factory, and design team. This contributes to reduced repair costs and to maintaining maximum availability through proactive service.

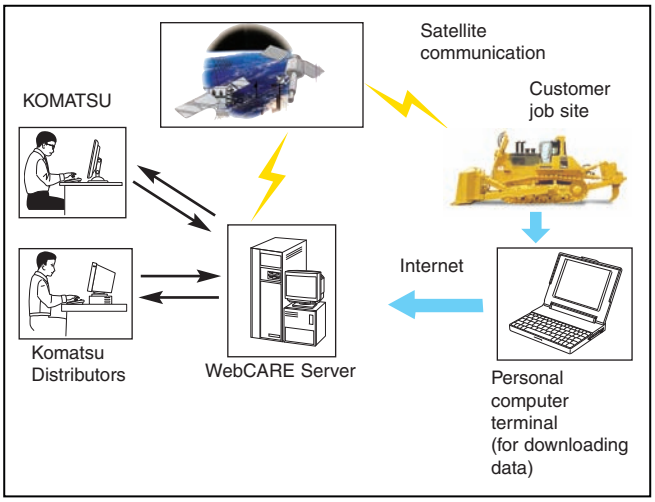

Flat Face O-Ring Seals

Flat face O-ring seals are used to securely seal all hydraulic hose connections and to prevent oil leakage.

Enclosed Hydraulic Piping

Hydraulic piping for the blade tilt cylinder is completely housed in the push arm protecting it from damage.

Modular Power Train Design

Power train components are sealed in a modular design that allows the components to be dismounted and mounted without oil spillage, making servicing work clean, smooth, and easy.

Maintenance-Free Disc Brakes

Wet disc brakes are adjustment-free and provide excellent service life.

SPECIFICATIONS

ENGINE

Model . . . . . Komatsu SAA12V140E-3
Type . . . . . 4-cycle, water-cooled, direct injection
Aspiration . . . . . Turbocharged, air-to-air aftercooled
Number of cylinders 12
Bore x stroke . . . . . 140 mm x 165 mm **5.51" x 6.50"**
Piston displacement . . . . . 30.48 ltr **1,860 in³**
Governor . . . . . All-speed, electronic
Horsepower
SAE J1995 . . . . . Gross 671kW **899 HP**
ISO 9249/SAE J1349*. . . . . Net 664kW **890 HP**
Rated rpm 2000rpm
Fan drive type . . . . . Hydraulic
Lubrication system
Method . . . . . Gear pump, force lubrication
Filter . . . . . Full-flow and bypass combined

*Net horsepower at the maximum speed of radiator cooling fan . . . . . 641 kW **860HP**

TORQFLOW TRANSMISSION

Komatsu TORQFLOW transmission consists of a water-cooled, 3-element, 1-stage, 1-phase torque converter with lockup clutch and a planetary gear, multiple-disc clutch transmission which is hydraulically-actuated and force-lubricated for optimum heat dissipation. Gearshift lock lever and neutral safety switch prevent accidental starts.

Gear	Forward		Reverse	
1st	3.3 km/h	**2.1 mph**	4.2 km/h	**2.6 mph**
2nd	6.2 km/h	**3.9 mph**	8.0 km/h	**5.0 mph**
3rd	11.2 km/h	**7.0 mph**	14.0 km/h	**8.7 mph**

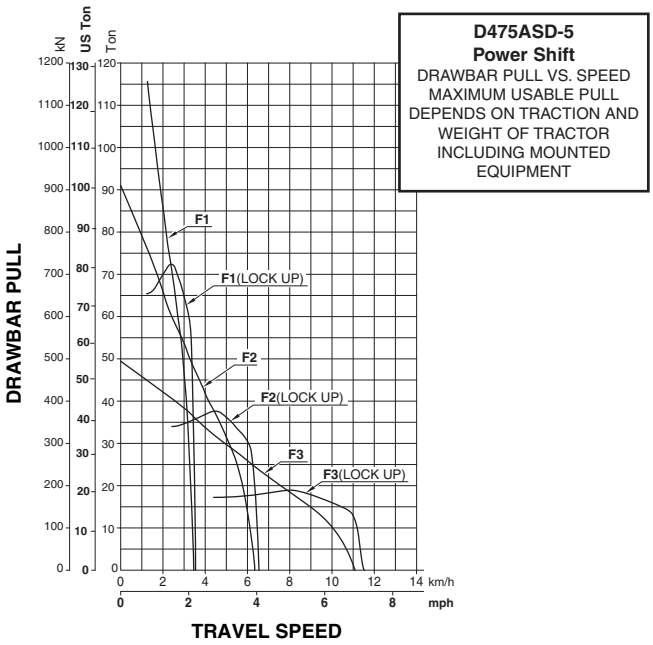

FINAL DRIVES

Double-reduction final drive of spur and planetary gear sets to increase tractive effort and reduce gear tooth stresses for long final drive life. Segmented sprocket teeth are bolt-on for easy replacement.

STEERING SYSTEM

PCCS lever, joystick-controlled, wet multiple-disc steering clutches are spring-loaded and hydraulically released. Wet multiple-disc steering brakes are spring-actuated, hydraulically released, and require no adjustment. Steering clutches and brakes are inter-connected for easy, responsive steering.

Minimum turning radius . . . . . 4.6 m **15'1"**

UNDERCARRIAGE

Suspension . . . . . Oscillating equalizer bar and pivot shaft
Track roller frame . . . . . Cylindrical, high-tensile-strength steel construction
Rollers and idlers . . . . . Lubricated track rollers

K-Bogie Undercarriage
Lubricated track rollers are resiliently mounted to the track frame with a bogie suspension system whose oscillating motion is cushioned by rubber pads.

Extreme Service Track Shoes
Lubricated tracks. Unique seals prevent entry of foreign abrasives into pin-to-bushing clearances to provide extended service life. Track tension is easily adjusted with grease gun.

Number of shoes (each side) 41
Grouser height:
Single grouser . . . . . 105 mm **4.1"**
Shoe width (standard) . . . . . 810 mm **32"**
Ground contact area . . . . . 73290 cm² **11,360 in²**
Ground pressure (Tractor) . . . . . 112 kPa 1.14 kg/cm² **16.2 psi**
Number of track rollers 8
Number of carrier rollers. 2

Extreme service shoes	Additional weight	Ground contact area	Tractor ground pressure
910 mm **36"**	1830 kg **4,030 lb**	82340 cm² **12,762 in²**	102 kPa 1.04 kg/cm² **14.8 psi**

COOLANT AND LUBRICANT CAPACITY (REFILL)

Fuel tank. . . . . 1670 ltr **441 U.S. gal**
Coolant . . . . . 210 ltr **55.5 U.S. gal**
Engine . . . . . 121 ltr **32.0 U.S. gal**
Torque converter, transmission,
bevel gear, and steering system . . . . . 210 ltr **55.5 U.S. gal**
Final drive (each side) . . . . . 75 ltr **19.8 U.S. gal**

DIMENSIONS

A	2770 mm	**9'1"**
B	6465 mm	**21'3"**
C	4546 mm	**14'11"**
D	2690 mm	**8'10"**
E	4524 mm	**14'10"**
F	10525 mm	**34'6"**
G	2405 mm	**7'11"**
H	4646 mm	**15' 3"**
I	1960 mm	**6'5"**
J	860 mm	**2'10"**
K	900 mm	**2'11"**

SUPER DOZER WITH COUNTERWEIGHT

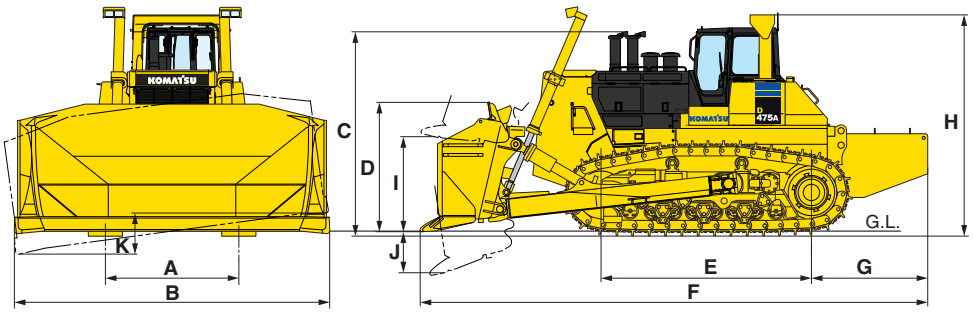

Ground Clearance: 655 mm **2'2"**

OPERATING WEIGHT

Tractor weight . . . . . 84510 kg **186,310 lb**
Including steel cab, rated capacity of lubricant, coolant, full fuel tank, operator, and standard equipment.

Operating weight. . . . . 113200 kg **249,560 lb**
Including strengthened Super Dozer blade, counterweight, steel cab, ROPS, operator, standard equipment, rated capacity of lubricant, coolant, and full fuel tank.

Ground pressure . . . . . 151 kPa 1.54 kg/cm² **21.9 psi**

HYDRAULIC SYSTEM

Closed-center load sensing system (CLSS) designed for precise and responsive control, and for efficient simultaneous operation.

Hydraulic control units:
All spool valves externally mounted beside the hydraulic tank.
Piston type hydraulic pump with capacity (discharge flow) of 542 ltr/min **143 U.S. gal/min** at rated engine rpm.

Relief valve setting . . . . . 27.5 MPa 280 kg/cm² **3,980 psi**

Control valves:
Spool control valves for Super Dozer
Positions: Blade lift . . . . . Raise, hold, lower, and float
Blade tilt . . . . . Right, hold, and left
Blade pitch
(digging angle) . . . . . Increase, hold, and decrease

Hydraulic cylinders . . . . . Double-acting, piston

	Number of cylinders	Bore
Blade lift	2	180 mm **7.09"**
Blade tilt and pitch	2	250 mm **9.84"**

Hydraulic oil capacity (refill):
Super Dozer . . . . . 180 ltr **48 U.S. gal**

DOZER EQUIPMENT

Blade capacities are based on the SAE recommended practice J1265.

	Overall length with dozer	Blade capacity	Blade length x height	Maximum lift above ground	Maximum drop below ground	Maximum tilt adjustment	Weight: Dozer equipment	Ground pressure*
Super Dozer	8980 mm **29'6"**	45.0 m³ **58.9 yd³**	6465 mm x 2690 mm **21'3" x 8'10"**	1960 mm **6'5"**	860 mm **2'10"**	900 mm **2'11"**	21350 kg **47,070 lb**	151 kPa 1.54 kg/cm² **21.9 psi**

*Ground pressure shows tractor with Super Dozer blade, cab, ROPS, counterweight, operator, and standard equipment.

STANDARD EQUIPMENT

- Air conditioner with heater and defroster
- Air-suspension seat
- Alternator, 100 A/24 V
- Back-up alarm
- Batteries, 200 Ah/4 x 12 V
- Decelerator pedal
- Double wipers, lower cab windows
- Dry-type air cleaner with dust evacuator and dust indicator
- Eight-roller track frames
- Fan, hydraulic driven
- Fast fuel fill
- Final drive case wear guard
- Head rest
- Hinged underguard with front pull hook
- Hydraulics for ripper
- Hydraulic track adjusters
- Lighting system (including six front and two rear lights)
- Lockup torque converter
- Mirror, rearview
- Mufflers with rain caps
- Perforated front mask
- Prelubrication
- Radiator reserve tank
- Radio-AM/FM cassette
- ROPS brackets
- Seat belt, 76 mm **3"** wide, retractable
- Segmented sprockets
- Shoes, 810 mm **32"** extreme service, single-grouser
- Starting motors, 2 x 7.5 kW/24 V
- Steel cab w/ROPS
- Steering control
- Sun visor
- TORQFLOW transmission
- Track roller guards
- VHMS with ORBCOMM
- Warning horn
- Water separator
- Wet steering clutches

ROPS*:
Weight . . . . . 940 kg **2,070 lb**

Dimension:
Width . . . . . 1940 mm **6'4"**

*Meets ISO 3471, SAE J1040 APR88, ROPS standards.

Steel cab:**
Weight . . . . . 455 kg **1,000 lb**

Dimension:
Length . . . . . 1790 mm **5'10"**
Width . . . . . 1455 mm **4'9"**
Height from compartment floor to ceiling . . . . . 1530 mm **5'0"**

**Meets ISO 3449 FOPS standard.

OPTIONAL EQUIPMENT

- Additional cab heater
- Battery isolator
- Counterweight
- Shoes:
  —910 mm **36"** extreme service
- Spill guards
- Variable giant ripper

Variable giant ripper:
Variable, parallelogram single-shank ripper ideal for ripping up tough material. Ripping angle is variable. Ripping depth is adjustable in four stages by a hydraulically controlled pin puller.

Weight (including hydraulic control unit) . . . . . 7360 kg **16,230 lb**
Beam length. . . . . 1477 mm **4'10"**
Maximum lift above ground . 1196 mm **3'11"**
Maximum digging depth . . . . 1744 mm **5'9"**

Counterweight:
Weight . . . . . 7271 kg **16,030 lb**

©2007 Komatsu America Corp. Printed in USA

KOMATSU®

Komatsu America Corp. is an authorized licensee of Komatsu Ltd.
Materials and specifications are subject to change without notice
KOMATSU® is a trademark of Komatsu Ltd., Japan